⚠ WARNING
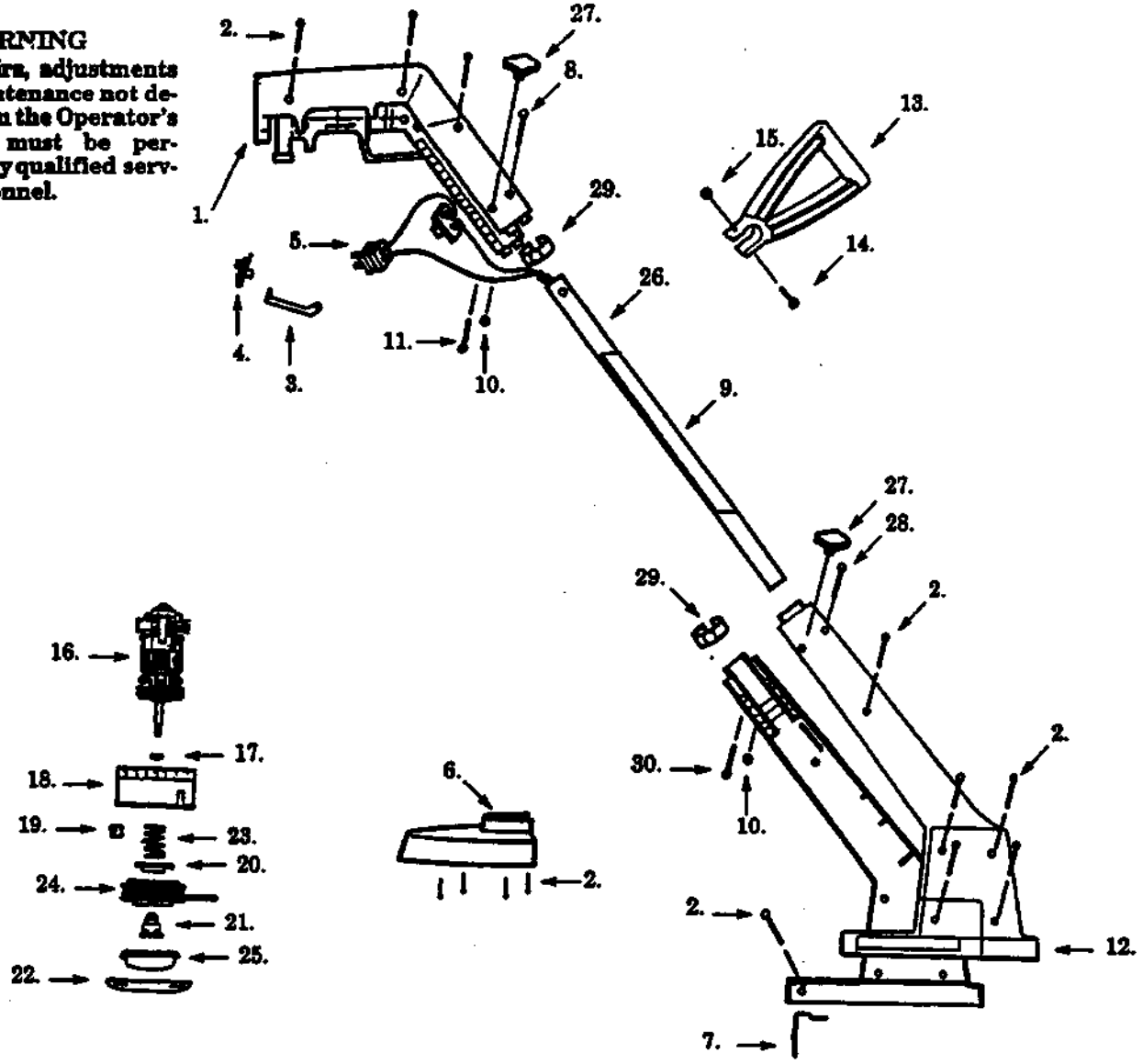
All repairs, adjustments and maintenance not described in the Operator's Manual must be performed by qualified service personnel.